F01 115

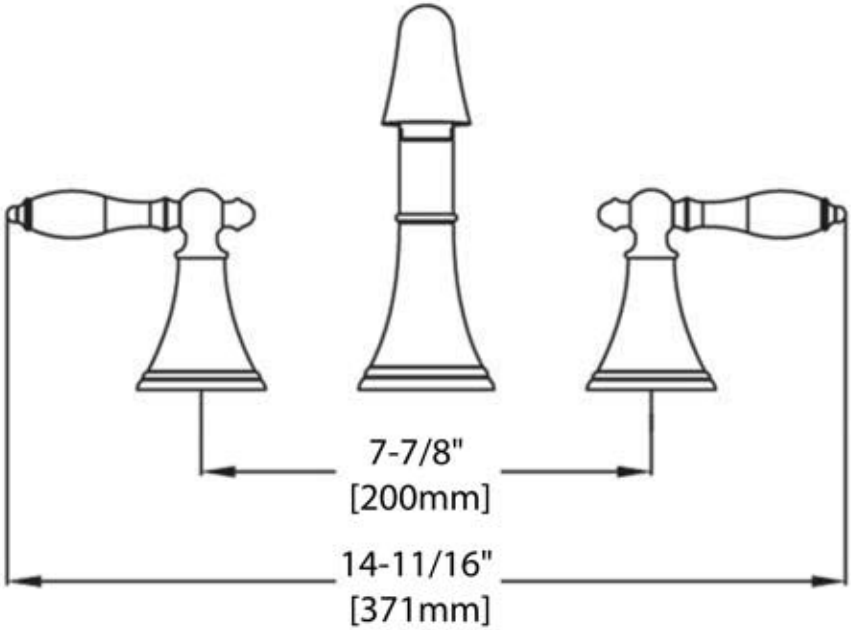

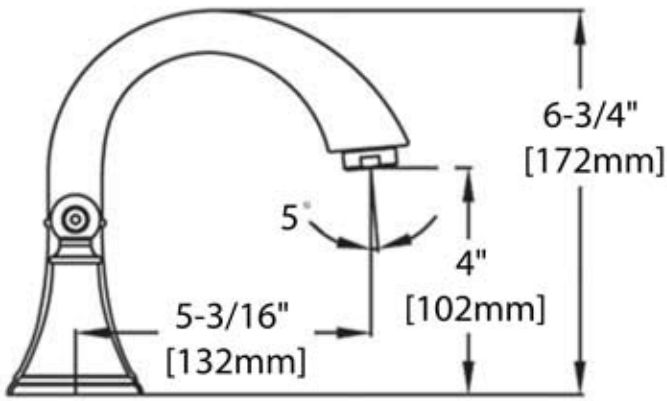

BLOSSOM
luxury made simple