BLOSSOM
www.BlossomUS.com

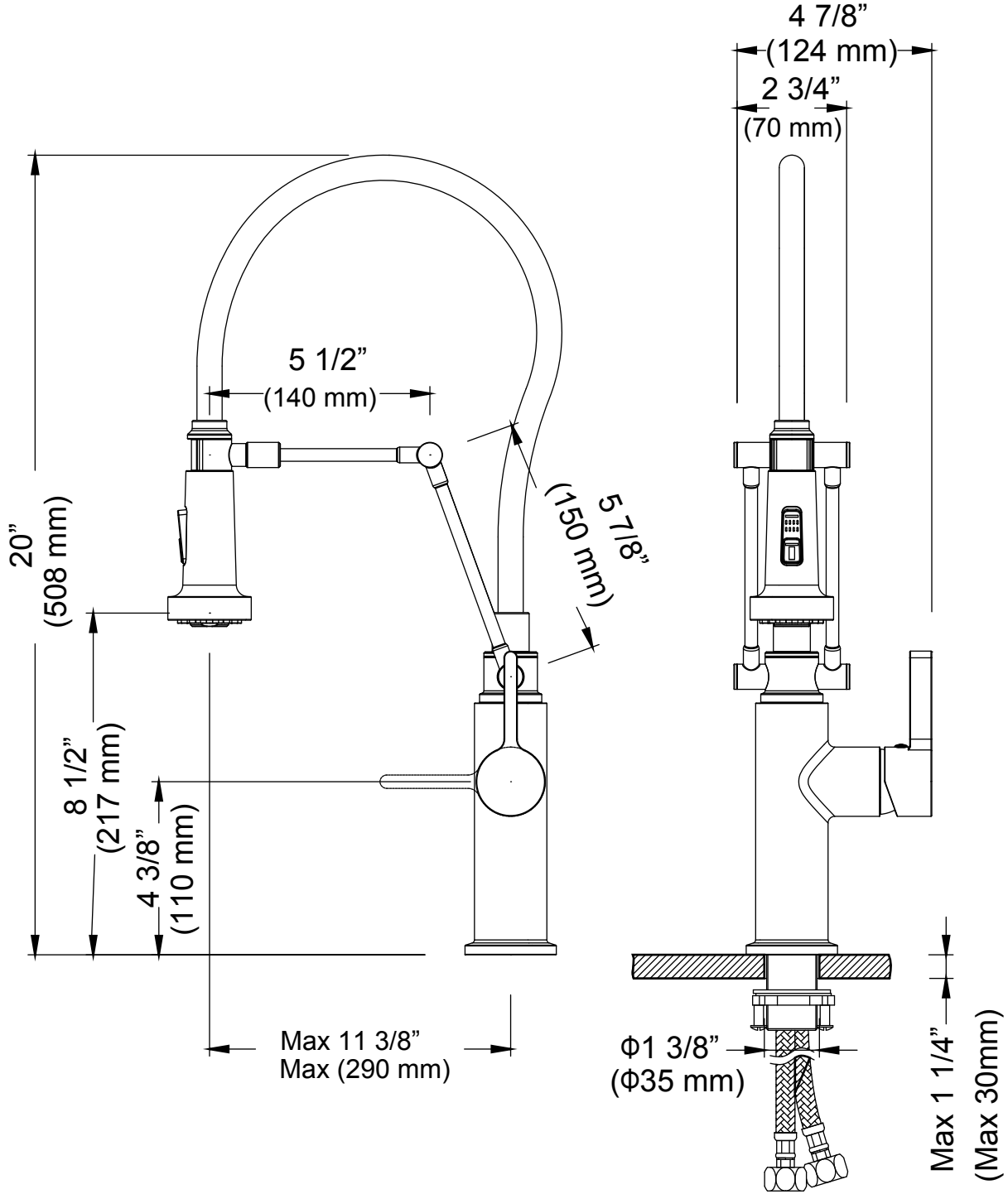

MODEL# : F01 208